Cast Stone Architraves

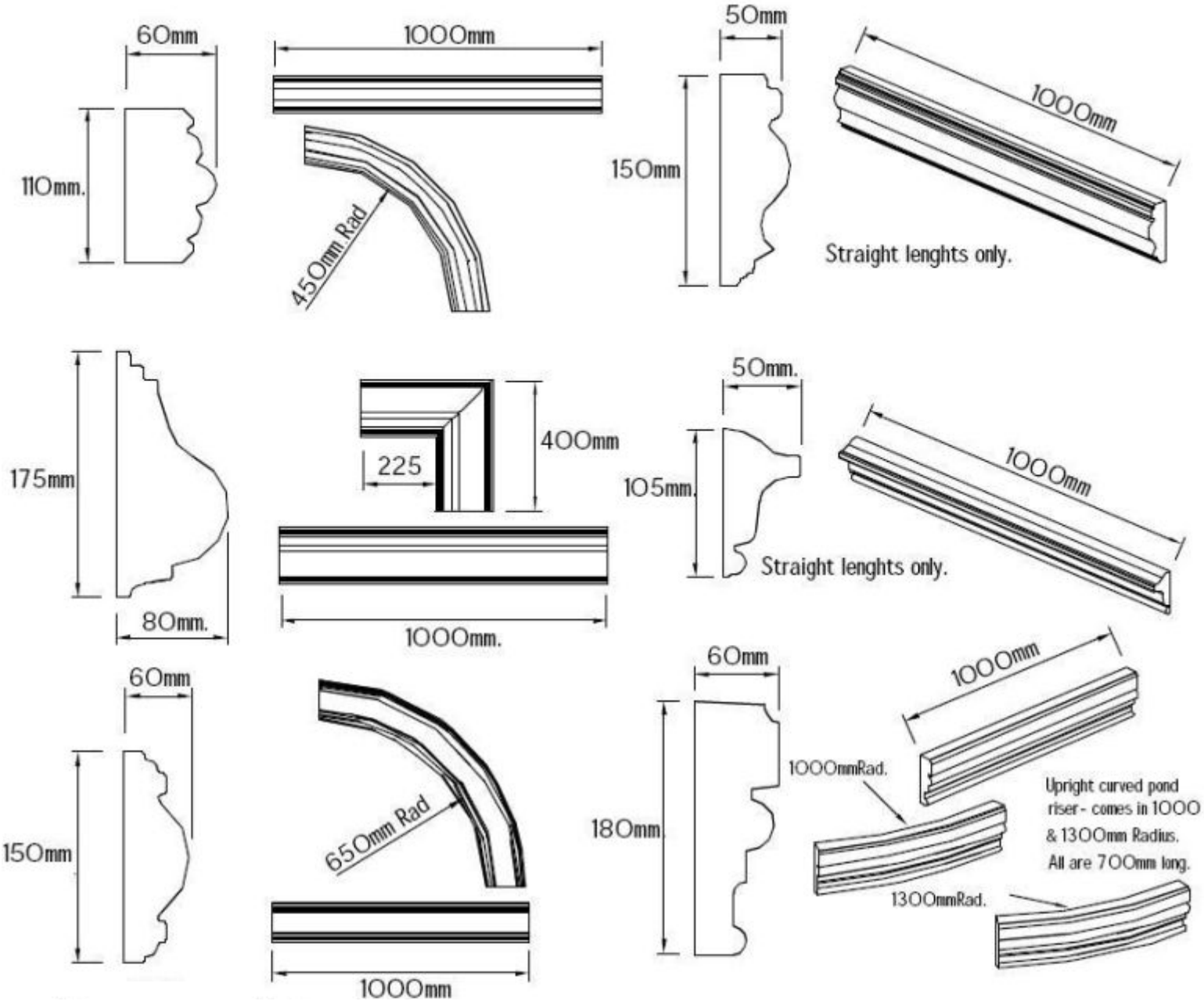
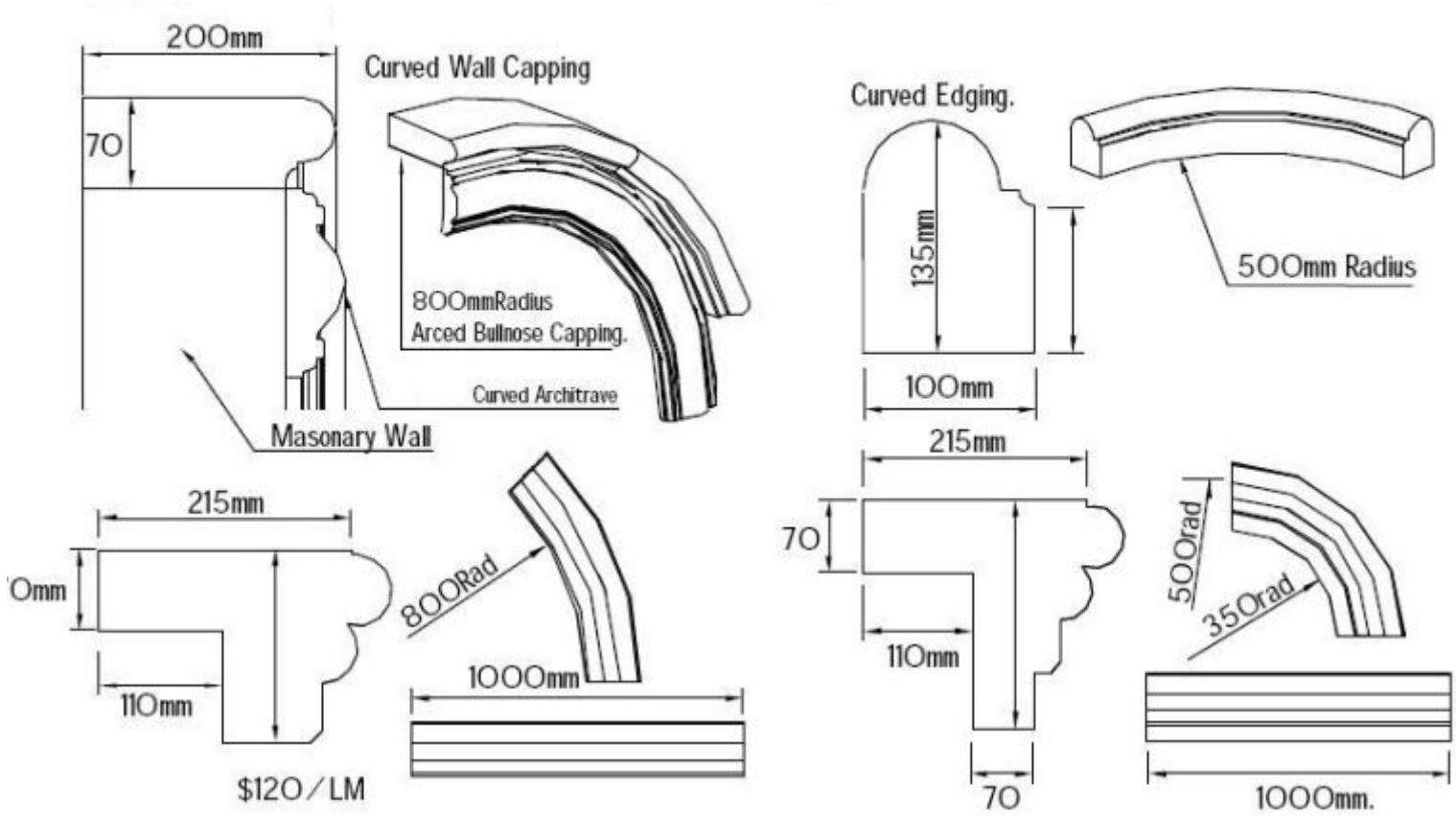
Cast Stone Architraves